AHD-SAS 15 M12 / AHD-SAS 15 RJ45
Data station for 15 inputs for analog and binary sensors

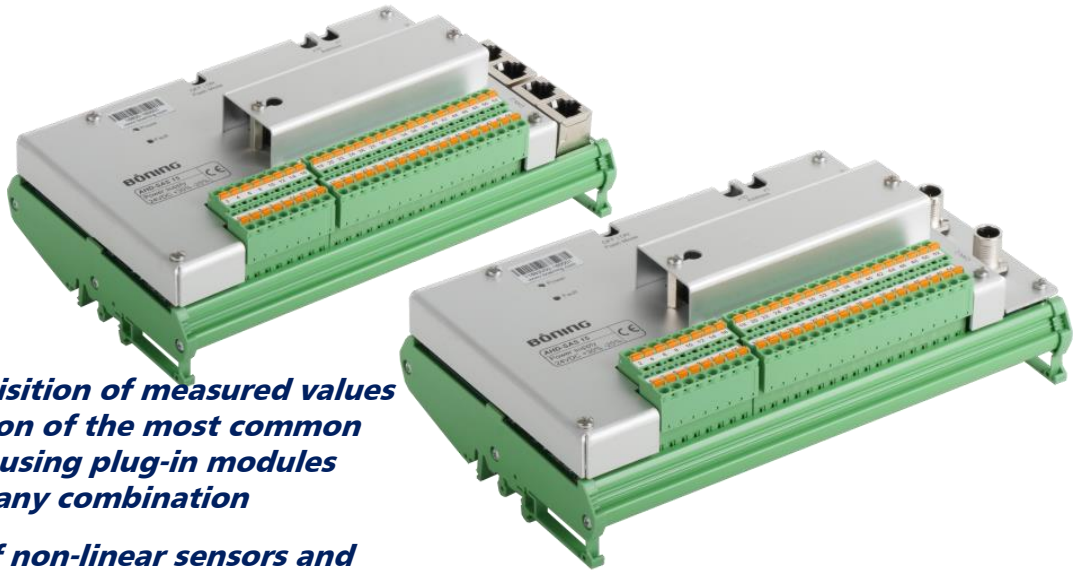

- ***Flexible acquisition of measured values and adaptation of the most common sensor types using plug-in modules allowing for any combination***
- ***Processing of non-linear sensors and tank curves via configurable characteristic curves***
- ***Safe CAN bus communication (redundantly on request) allows decentralized installation close to the sensor***
- ***Can be used as a stand-alone system***

The data stasion AHD-SAS 15 is used in decentralized alarm and monitoring systems on ships and in industrial installations for recording, monitoring and processing binary and analog sensors. All common types of sensors can be directly connected and monitored.

AHD-SAS 15 is usually connected over the CAN bus to other components of an AMS/AMCS system to which the captured data are provided for further processing or visualization. Two CAN busses are available for redundant communication. Two versions of the physical CAN connections are available:

- AHD-SAS 15 M12 with 2 x DeviceNet connectors for the two CAN buses (part no. 11663V02)
- AHD-SAS 15 RJ45 with 2 x RJ45 connectors for each of the two CAN buses (article no. 16800)

For the acquisition of the different measurement types, 15 pluggable input modules are available, which are installed according to the project-specific configuration in slots provided for this purpose (see table Input modules). AHD-SAS 15 can therefore very flexibly be integrated into a specified or existing sensor system.

Wide-ranging parameterization options allow the use of any characteristic curve, so applications with tank content measurements or other non-linear systems can be set up successfully.

The following operating modes can be selected:

- Passive Mode:
  In passive mode, AHD-SAS 15 operates without specific configuration and sends only raw sensor values to the system via the CAN bus.

  This mode should be preferred for all projects that include a data station AHD-DPU 9 data station or a Panel PC.

  In this case, the raw data are processed by the higher-level data stations. Physical measured values are calculated from raw data, configured limit values are monitored and alarms are generated if the limits are exceeded. In addition, freely configurable events can be processed with logical functions, which makes it easy to set up complex PLC controls.
- Active Mode:
  In active mode, AHD-SAS 15 operates as a stand-alone device. This application is only useful for smaller monitoring systems implemented without an AHD-DPU 9 or a Panel PC. In this case, serial devices (e.g. AHD-PS 15, AHD-R101 or AHD-SW I/II) can be connected directly to AHD-SAS 15 as extensions.

Wiring diagram

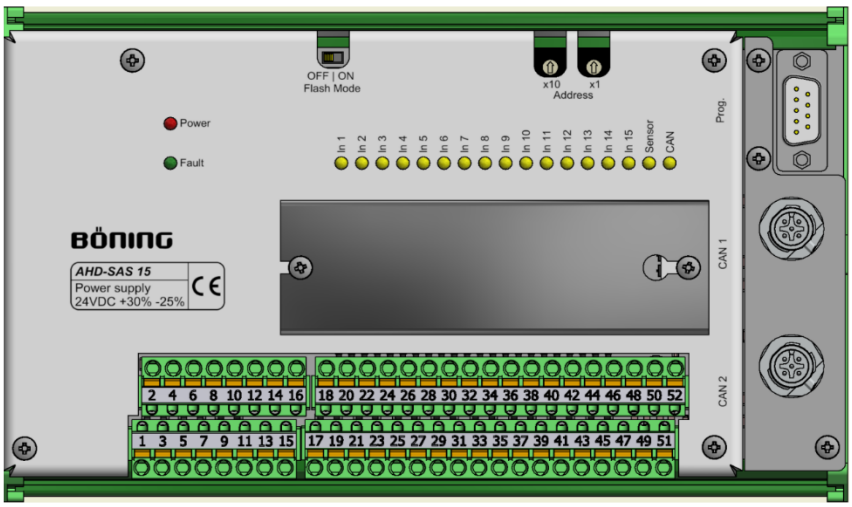

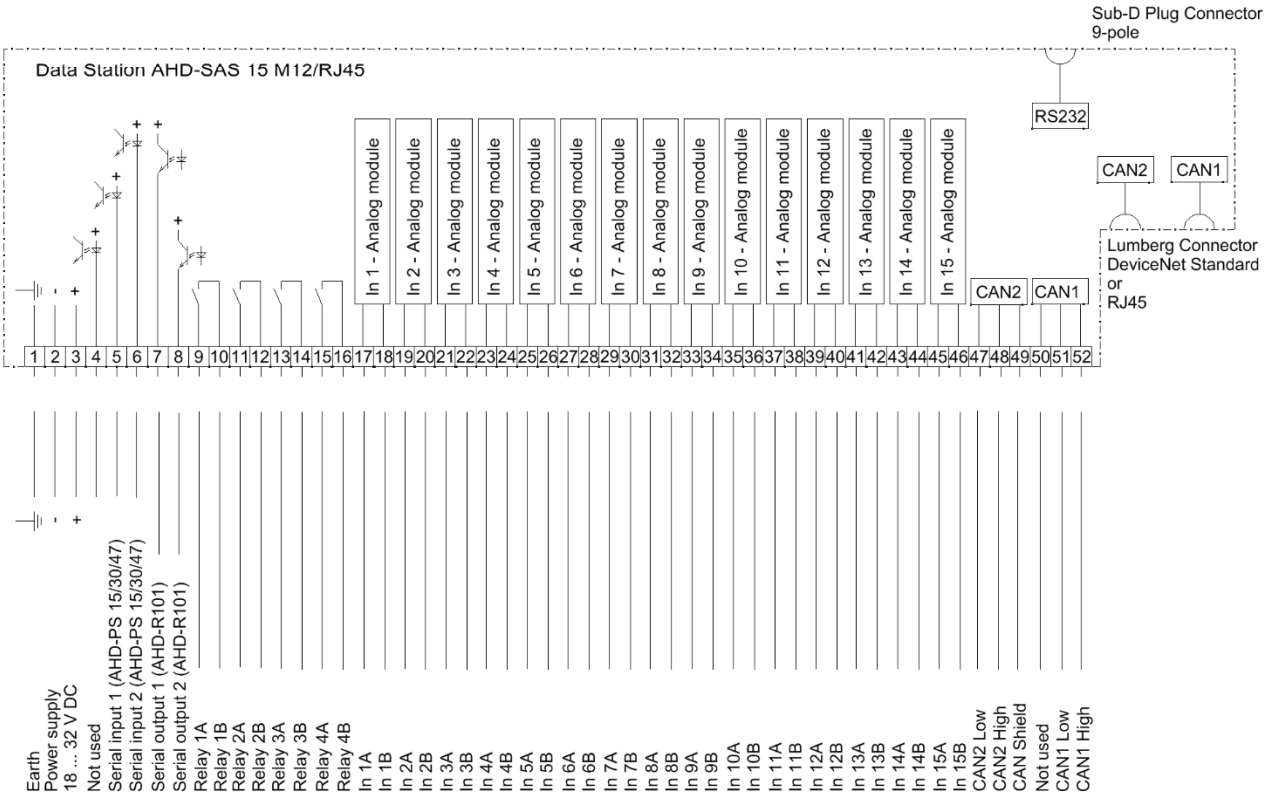

Images and Dimensions

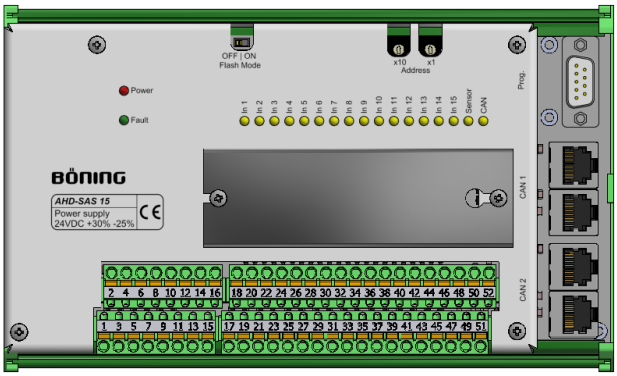

AHD-SAS 15 RJ45
Version with 2x2
RJ45 connections
(Item no.: 11663V02)

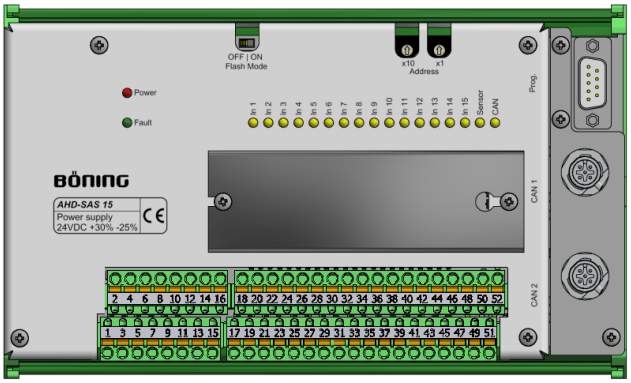

AHD-SAS 15 M12
Version with 2
DeviceNet connections
(Item no.: 16800)

Dimensions in mm

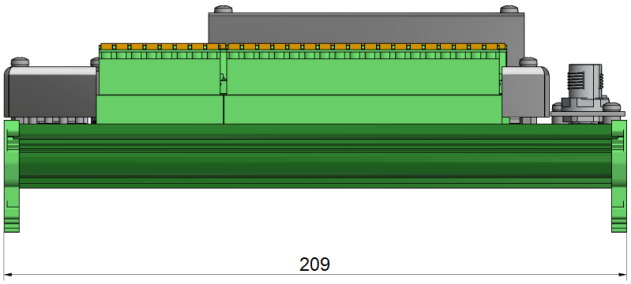

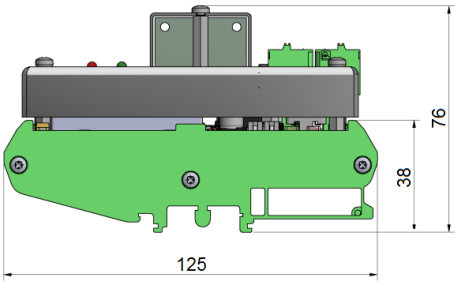

Table of input module types (I)

Code [1])	Selection (DeviceConfig)	Application	Result [2])	Remark
B	B Module "4..20mA" (1..40mA, 2pole)	Sensor with current output (2-pole)	Current [mA]	Sensor is supplied via AHD-SAS 15
C	C Module "4..20mA" (1..40mA, 4pole)	Sensor with current output (4-pole)	Current [mA]	Sensor is supplied via separate wires
E	E Module "Binary" (Contact Plus Switched) [3])	Sensor with switch contact or push button (plus signal)	Binary value [0 or 1]	Switched plus (same potential as system)
F	F Module "Binary" (Contact Potential Free) [3])	Sensor with switch contact or push button (potential-free)	Binary value [0 or 1]	Potential-free contact, switched minus (same potential as system)
G (Type 1)	G Module "PT100" (-80…+220°C) [4])	PT100 temperature sensor (max. 220°C / 2-pole)	Temperature [°C]	Without sensor-fault monitoring
G (Type 2)	G Modul Type2 "PT100" (-80…+220°C incl. SF) [4]) [5])	PT100 temperature sensor (max. 220°C / 2-pole)	Temperature [°C]	With sensor-fault monitoring
G (Type 3)	G Modul Type3 "Resistor" (68...183 Ohm)	Resistance sensor with free characteristic curve (max. 183 Ohms)	Resistance [Ohm]	Specify characteristic curve
H (Type 1)	H Module "PT1000" (-80…+220°C) [4])	PT1000 temperature sensor (max. 220°C / 2-pole)	Temperature [°C]	Without sensor-fault monitoring
H (Type 2)	H Modul Type2 "PT1000" (-80…+220°C incl. SF) [4]) [5])	PT1000 temperature sensor (max. 220°C / 2-pole)	Temperature [°C]	With sensor-fault monitoring
H (Type 3)	H Modul Type3 "Resistor" (680...1830 Ohm)	Resistance sensor with free characteristic curve (max. 1830 Ohms)	Resistance [Ohm]	Specify „Characteristic Curve"
I	I Module "NiCrNi" (0..950°C) [4])	NiCrNi temperature sensor (max. 950°C)	Temperature [°C]	Define channel for compensation of ambient temperature!
J	J Module "0..5V" (0..6V)	Sensor with voltage output (max. 6 volts)	Voltage [V]	Measurement against system ground
K	K Module "0..10V" (0..12V)	Sensor with voltage output (max. 12 volts)	Voltage [V]	Measurement against system ground
L	L Module "0..30V" (0..36V)	Sensor with voltage output (max. 36 volts)	Voltage [V]	(Not available in new systems, replaced by T-module)
M	M Module "Racor/Parker" (10..100kOhm)	Resistance sensor (Manufact. Racor / Parker)	Raw Value [0..4095] [6])	Water detection (recommended settings: Analogue, "Limit AL min" = 2000) [7])

Table of input module types (II)

Code [1]	Selection (DeviceConfig)	Applicatio	Result [2]	Remark
N	N Module "Frequency" (0..8000Hz)	Sensor with Frequency signal (max. 8000 Hz)	Frequency [Hz]	Galvanically isolated input (e.g. Speed Pick-Up)
	O Module "Blank" (no Function)	Place holder (no sensor)	Raw Value [6] [0..4095]	Empty-Module (without function)
P	P Module "4..20mA" (1..40mA, 2pol., Galv. Isol.)	Sensor with current output (2-pole)	Current [mA]	Galvanically isolated input
R (Typ 1)	R Module "PT100" (-80..+650°C) [4]	PT100 temperature sensor (max. 650°C / 2-pole)	Temperature [°C]	Without sensor-fault monitoring
R (Typ 2)	R Modul Type2 "PT100" (-80..+650°C incl. SF) [4] [5]	PT100 temperature sensor (max. 650°C / 2-pole)	Temperature [°C]	With sensor-fault monitoring
R (Typ 3)	R Modul Type3 "Resistor" (68...330 Ohm)	Resistance sensor with free characteristic (max. 330 Ohm)	Resistance [Ohm]	Specify characteristic curve
S (Typ 1)	S Module "PT1000" (-80..+650°C) [4]	PT1000 temperature sensor (max. 650°C / 2-pole)	Temperature [°C]	Without sensor-fault monitoring
S (Typ 2)	S Modul Type2 "PT1000" (-80..+650°C incl. SF) [4] [5]	PT1000 temperature sensor (max. 650°C / 2-pole)	Temperature [°C]	With sensor-fault monitoring
S (Typ 3)	S Modul Type3 "Resistor" (680...3300 Ohm)	Resistance sensor via free characteristic (max. 3300Ohm)	Resistance [Ohm]	Specify characteristic curve
T	T Module "0..44V" (0..44.9V)	Sensor with voltage output (max. 44.9 Volts)	Voltage [V]	Measurement to system ground (50 mA fuse recommended)
U	U Module "15..200 Ohm" (0..400Ohm galv. isol.)	General resistance sensor (max. 400 Ohm)	Resistance [Ohm]	Galvanically isolated input (specified from 15 to 200 Ohm)
V	V Module "8..44V" (7..44.9V galv. isol.)	Sensor with voltage output (max. 44.9 Volts)	Voltage [V]	Galvanically isolated input (min. voltage = 7 Volt)

[1]) The typical sensor or measuring range is indicated. The values in brackets contain the maximum detection range and additional information, if applicable. The modules "G", "H", "R" or "S" each allow 3 different measuring methods (Type1...Type3). AHD-SAS 15 in active mode can only use method "Type1"!

[2]) The output variable is calculated depending on the selected input module. All further processing steps (e.g. characteristic curve definition, range specifications or limit value comparison) are based on this.

[3]) Function without wire break detection. If fault monitoring is required for binary sensors, this channel must be processed as analog.

[4]) The calculation of the temperature value is done automatically using internal characteristics. An additional specification under "Characteristic Curve" is not required.

[5]) Function with sensor fault detection (wire break and short circuit)

[6]) Output = internal raw value in mV

[7]) Limit value comparison with raw value: alarm is triggered at water detection (Rsens < 47kOhm)

Technical Data

Mechanical Data	
Dimension W x H x D	209 x 125 x 76 mm
Min. installation Height for CAN Cable (M12)	116 mm
Weight	Appr. 0.7 kg
Environmental Data	
Operating Temperature	-30°C … +70°C
Storage Temperature	-50°C … +85°C
Degree of Protection	IP 20
Required Distance to Compass	Standard magnetic compass: 0.40 m Steering magnetic compass: 0.50 m
Electrical Data	
Power Supply	24 V DC (+30% / -25%)
Current Consumption	Max. 700 mA (24 V DC)
Interfaces	2 x CAN-Bus on terminal strip **with** DeviceNet connector (M12) (item no. 11663V02) *or* RJ45 In/Out plugs (item no. 16800) 1 x RS232 (Sub-D9), internal use only

Inputs	15 x slot for binary and analog inputs, free and individually configurable with input modules according to project-specific configuration 2 x serial (opto-coupler) from binary data stations AHD-PS 15/30/47
Outputs	4 x potential-free relay contact, 30 V DC / 2 A max: (freely configurable) 2 x serial (opto-coupler) for relay station AHD-R101 or Spill Warning module AHD SW I/II
Installation	
Module carrier housing	Installation directly on DIN rails TS 32 oder TS 35
Approvals	
Classification Societies	DNV, LR, RS
Item Numbers	
AHD-SAS 15 M12	11663V02
AHD-SAS 15 RJ45	16800

The manufacturer accepts no liability for possible errors contained in descriptions and diagrams.