bugvs-e.mcd

BOW THRUSTER CONTROL WITH VARIABLE PITCH PROPELLER AHD 903BS

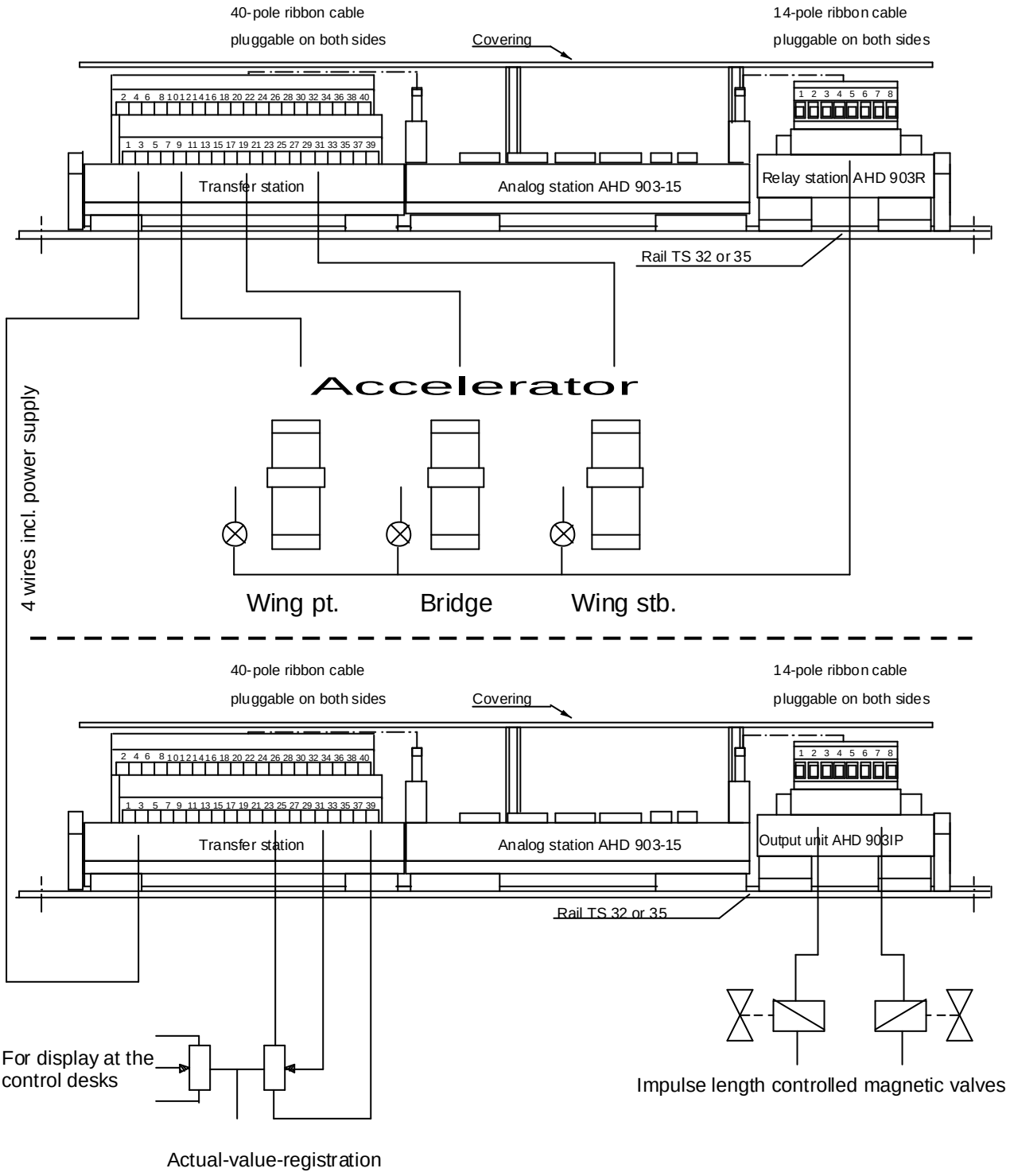

Development, manufacturing, service for shipping and industry
Böning Automationstechnologie GmbH & Co. KG • Am Steenöver 4 • D-27777 Ganderkesee
Phone: +49(0)4221 9475-0 • Fax: +49(0)4221 9475-22 • Internet: www.boening.com • E-Mail: info@boening.com

Control for Bow Thruster with Adjustable Pitch Propeller
AHD 903BS

903bsi-e

Contents

Control for Bow Thruster with Adjustable Pitch Propeller AHD 903BS

1180-1i-e.DOC

1. Construction

The system for controlling a bow thruster with adjustable-pitch propeller consist of two units. The operating unit for the three control units is located on the bridge, the control unit for propeller adjustment at the bow thruster. Both units communicate serially with each other and are connected over four wires (incl. power supply). They consist of similar analogue data stations AHD 903-15. An additional relay module AHD 903R is used on the bridge and a module AHD 903IP, as well as two further relays, are used for impulse length control on the bow thruster side.

2. Control Units

The operating unit on the bridge receives the inputs from the main control unit, as well as from two wing control units on port and starboard. The default angle for propeller adjustment is reegistered and evaluated over a potentiometer (joystick with 0-positon in the middle).

After activation, the system can only be operated from the bridge control unit. Before starting for propeller drive is enabled at the bow thruster side (relay K3), the selector switch for operation has to be in position "bridge" and the potentiometer has to be in position "0" (micro-contact). As long as these conditions are not fulfilled, the lamp „ready for operation" at the bridge control unit signalises this by slow flashing in a 1.5-seconds-cycle. Once the start function is enabled, the flashing turns into permanent light.

Adjustment of the bow thruster angle is done over a 3-point after-running controller by comparison of target (joystick) and actual value (controller at the bow thruster).

If, during operation, driving shall be continued from one of the wing control units, the selector switch for operation at the main control unit has to be switched into the appropriate position (port or starboard). Then, the takeover-button at the wing control unit has to be pushed, which causes flashing of the lamp „ready for operation". The real takeover happens when the default target value at the wing control unit (joystick position) is the same as the presently active actual value. As long as this is not the case, operation of the bow thruster will be continued from the bridge control unit, even if the selector switch for operation is in starboard- or port-position. If the conditions for takeover at the wing control unit are fulfilled, the flashing of the lamp „ready for operation" turns into permanent light and the system is now operated from the wing. If there is no synchronisation between target and actual value within ten minutes, the flashing lamp „ready for operation" at the wing control unit goes out again. In this case, takeover would have to be repeated.

The re-transmission of the command from wing to bridge is done in the same way as described before. The selector switch for operation has to be switched into position "bridge/main control unit" and the takeover-button has to be pushed. For correct takeover, the default target value must be equal to the actual value, too.

Each control unit has an actual value indication for the actual propeller angle. For safety reasons, this indication is led separate from the system and activated directly by the actual-value-controller at the bow thruster.

3. Bow Thruster

On the bow thruster side, the target value default settings are received serially by the operating unit and the relevant proportional-magnet-valves are activated via a servo control (impulse length control). For return information, the actual value of the propeller angle is registered analogously and then evaluated.

If target and actual position are too far from each other, the relevant transistor output (increase or decrease angle) connects through completely. The actual value now tracks the target value and gets close to it. Within this close-up range, the two proportional solenoid valves are activated by the impulse durations. Therefore, there should always be a stabile condition when the system is deactivated (actual value = target value).

The close-up range must be regarded as positive and negative offset around the actual value. The default value for it corresponds to a certain angle which can be adjusted over 6 DIP-switches on the circuit board in the terminal box. At this, two criteria have to be considered:

a) The smaller the close-up range can be chosen, the more precisely the actual value is adjusted to the target value.

b) On the other hand, the value should be chosen high enough to allow balancing (in the relevant system) of deviations caused by oil leakages, within the range of the impulse length activation or within the close-up range.

The solenoid valves do not open before a minimum current is reached. The minimum current is usually 20% of the rated current. This minimum current can be adjusted with a special DIP-switch.

a) Level 1 = 16% minimum current, which means that the valve is still closed at the start of the control range.

b) Level 2 = 24% minimum current, which means that the valve is always opened a little bit at the start of the control range.

The solenoid valves are only activated in connection with enabled start function. The conditions for enabled start function are as described above.

4. Failure Report

Relay K4 serves for failure report at the bridge side, as well as at the bow thruster side. An open contact signalises a failure, missing configuration (see Setup) or wire breakage and can thus be evanluated or indicated correspondingly. Additionally, in case of failure, the start release is cancelled and the solenoid valves are switched idle.

5. Commissioning

In order to make the system ready for operation, it has to be programmed via the integrated adjustment software. If programming has not yet been done, the system can not work. In this case, the failure-relay K4 is activated after switching on of the device and the lamp “ready for operation” on the bridge flashes in a 5-seconds-cycle; 1 second on, 4 seconds off. Thus, the user is requested optically to do the programming.

On request, the system can be pre-configured ex works. Thus, the system is ready for operation immediately after switching on, but this is only reasonable, if the exact adjustment values are known (e. g. for spare-parts, as far as the adjustment values had been taken down).

During programming, the target- and actual-value-positions of the controllers are co-ordinated with eachother. For this purpose, the relevant limiting positions of the adjustable pitch propeller have to be adjusted and the corresponding positions of the controllers have to be stored durably. Please program as follows:

1. Switch off power supply of the device. To activate the programming mode, terminals 37 and 38 of the unit, which is installed on the bridge, have to be connected over a jumper.

2. Now switch on again the power supply. The lamp “ready for operation” in the bridge control unit should flash rapidly with two flashes per minute. This signalises the activated programming mode.

3. The selector switch for operation from the bridge control unit is now turned into position “port” to adjust the first limiting position. “Port” is now the value for max. negative propeller angle.

4. Correspondingly, now the max. negative propeller angle is directly adjusted over manual or emergency control of the bow thruster.

5. Then, the target value controllers (joysticks) of all three control units are switched into position „**max. negative propeller angle**“ (lowest position).

6. After checking the three previous instructions again, now, the relevant controller positions for this limiting position can be stored durably. For this purpose, the takeover-button in the bridge control unit has to be pushed for app. 1 sec. After disengaging this button, the lamp “ready for operation” shows permanent light for app. 2 sec. in order to acknowledge programming optically.

7. For adjustment of the second limiting position, the selector switch for operation is switched into position “starboard” (Stb. is now the value for max. positive propeller angle).

8. Now the max. positive propeller angle is adjusted over manual or emergency control.

9. The controllers (joysticks) of the three control units are then adjusted into the corresponding position “max. positive propeller angle” (highest position).

10. The programming of this limiting position is now done as described under 6. (pushing of the takeover-button for app. 1 sec.).

11. Finally, the zero-position is adjusted. For this purpose, the selector switch for operation is switched into position “bridge” (bridge is now the value for zero-position).

12. Now, the zero-position (angle = zero) is adjusted over manual or emergency control.

13. The potentiometers (joysticks) of the three control units are adjusted into positon “angle zero”. While doing this, it has to be monitored, if the micro-switch “position

zero”, which is mechanically linked with the bridge control, really closes, as otherwise the zero-position can not be adjusted.

14. The programming of the zero-position is now also done as described under 6. (pushing of the takeover-button for app. 1 sec.). If there is no optic acknowledgement (2 sec. permanent light), the micro-switch “position zero” at the controller of the bridge control unit is not closed. Please check again.

15. The jumper between terminals 37 and 38 is now removed to quit the programming mode. The power supply can remain switched on during this procedure. In case of correct programming, normal operation starts immediately.

After every programming step and after every activation, the installed software checks the conclusiveness of all programmed adjusting values. If they are not conclusive (e. g. min.-value higher than max.-value), the failure-relay K4 is activated and the lamp „ready for operation“ flashes in a 5-second-cycle; 1 sec. on, 4 sec. off.

Possible mistakes are, e. g., mix-up of the exterior controller connections (at max. positive propeller angle, the voltage at the slider has to be higher than in zero-position) or a wrong position of the selector switch (operation), whose labelling has a different meaning during programming. Anyway, in case of such a mistake, the whole programming procedure has to be repeated. The same applies, if there is a power failure during the programming phase.

If necessary, a new adjustment can be done later at any time. Here, it is also possible to only program single positions, e. g. only position angle zero --> follow instructions 1, 2, 11 to 15.

If the stored adjustment parameters shall be taken down, the installed EEPROM has to be removed for a short time and has to be read with a separate programming device.

DIP-Switch on Additional Module AHD 903IP

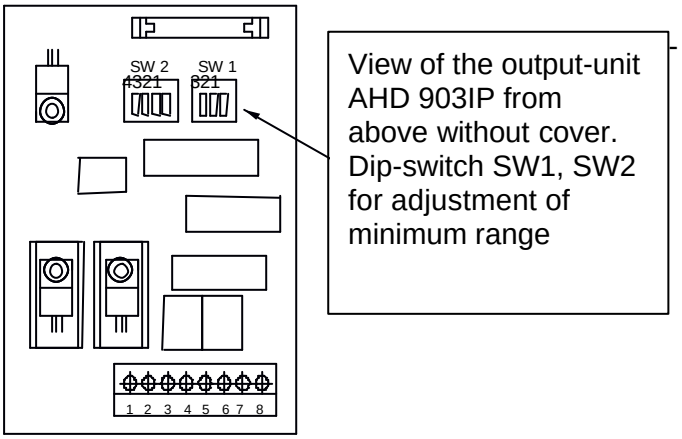

The size of the close-up range can be specified qualitatively as binary value with 6 DIP-switches in a range of 0-63. The value is proportional to the adjustable angle and has to be adjusted iteratively depending on the overall order. The close-up range is adjusted on the value 32 at delivery.

For the DIP-switches applies:

ON = binary low
OFF = binary high
SW1 – switch 2 corresponds to the most significant byte (value = 32)...
SW2 – switch 4 corresponds to the least significant byte (value = 1)

Example:

SW1-S2(32)	= OFF	Byte = High	Proportion of total value = 32
SW1-S3(16)	= ON	Byte = Low	No proportion
SW2-S1(8)	= OFF	Byte = High	Proportion of total value = 8
SW2-S2(4)	= OFF	Byte = High	Proportion of total value = 4
SW2-S3(2)	= ON	Byte = low	No proportion
SW2-S4(1)	= OFF	Byte = High	Proportion of total value = 1

Therefore, the total value of the close-up range is 45.

The min. current for the proportional solenoid valves is adjusted with the SW 1 - switch 1:

ON Imin = 16% of target current
OFF Imin = 24% of target current

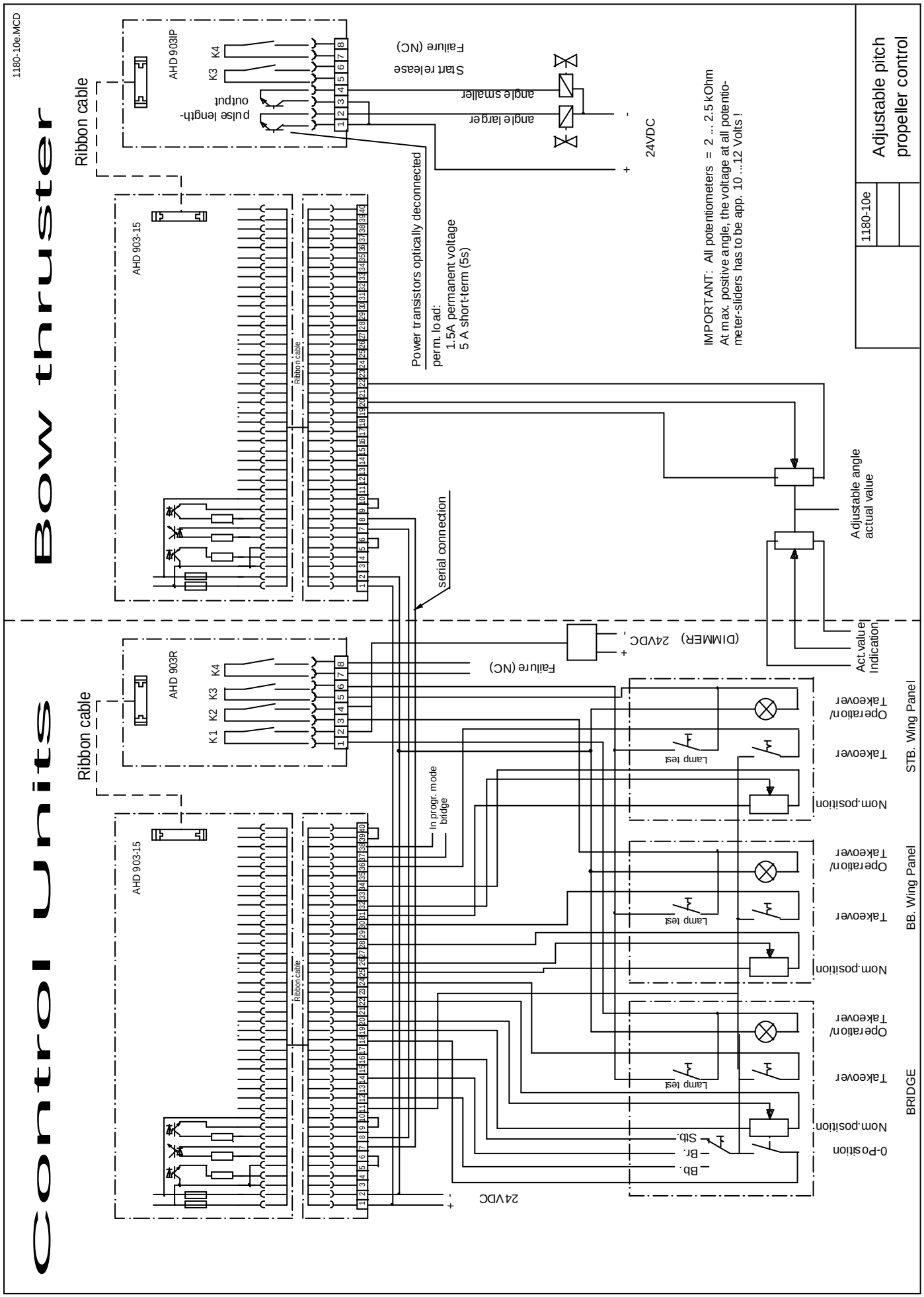
1180-10e.MCD
Bow thruster
Control Units
Ribbon cable
AHD 903IP
K4
K3
pulse length-output
Start release
Failure (NC)
angle smaller
angle larger
24VDC
AHD 903-15
Ribbon cable
Power transistors optically deconnected
perm. load:
1.5A permanent voltage
5 A short-term (5s)
IMPORTANT: All potentiometers = 2 ... 2.5 kOhm
At max. positive angle, the voltage at all potentio-meter-sliders has to be app. 10 ...12 Volts !
Adjustable pitch propeller control
1180-10e
Adjustable angle actual value
serial connection
Act.value Indication
(DIMMER) 24VDC
Failure (NC)
AHD 903R
K1 K2 K3 K4
In progr. mode bridge
Lamp test
Operation/ Takeover
Takeover
Nom.position
0-Position
Bb.
Br.
Stb.
STB. Wing Panel
BB. Wing Panel
BRIDGE
24VDC

903ver-e.MCD

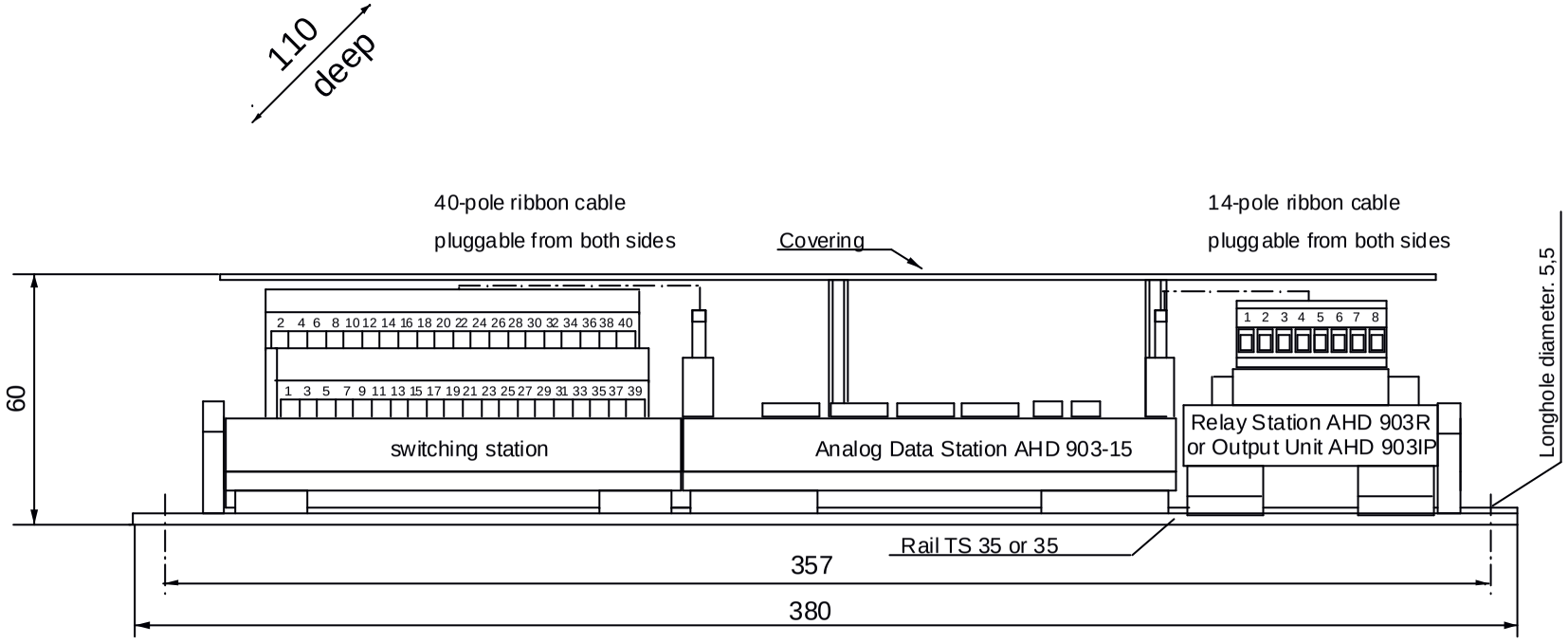

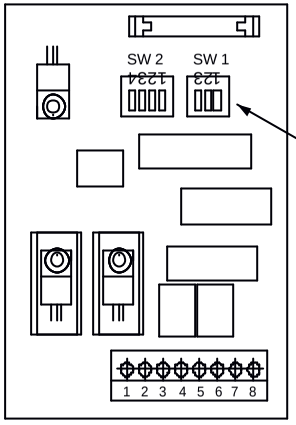

View of Output Unit
AHD 903IP from above
without covering.

DIP-switch SW 1, SW2
for adjustment of the near-
limiting-value-range

TECHNICAL DATA:

Power supply	: 24VDC +/-25%
Power cons. of electronics	: app. 0.15 A
Perm. load of relay contacts	: 1 A
Perm load of transistors	: 1.5 A permanent current, 5A short-term (5s)
Inputs	: 15 x analog/binary
Serial interface	: 1 x TTY bidirectional (current loop)
Perm. rel. air humidity	: 99%
Weight	: 1.5kg

903ver-e

Control for bow thruster AHD 903BS
with adjustable pitch propeller